Data Sheet
HC1500U03
3dB 90° Coupler IC
12GHz-18GHz

Features

- Small Size (2×2mm)
- Very Low Loss
- Tight Amplitude Balance
- High Isolation
- Low VSWR
- Good Repeatability
- Tape & Reel
- Power handling
  - 4 Watts as a divider
  - 2 Watts as a combiner

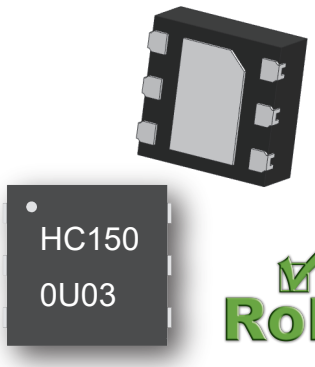

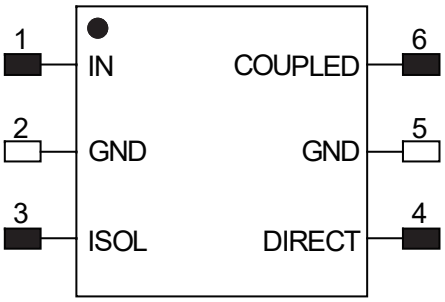

TOP VIEW

Applications

- Phase shifter / Attenuator
- Balanced amplifier / LNA configurations
- Modulators
- Mixers
- Power combining /dividing

Notes:
1.Require to add Capacitors of DC Blocker between Pins(with black color) and external circuit to prevent DC signal entry to guranteeparts normal work.
2.This part has passed through 100% RF test.

Electrical Specifications at 25º C

Parameter	Symbol	Min	Typ	Max	Unit
Frequency Range	F	12		18	GHz
Insertion Loss (Above 3dB)	I_L		0.75	0.90	dB
Isolation	Isol	12.5	13.5		dB
Phase balance	$ø_{bal}$		5	6	deg
Amplitude balance	A_{bal}		0.5	0.65	dB
Return Loss	R_L	13	15		dB

Yantel Corporation
Add: No.308-322, 3F, Building 1, Juchuang Jingu Innovation Park, Wenyuan Road 35, Xili Street, Nanshan, Shenzhen, China
Tel: 86-755-8355-1886 Fax: 86-755-8355-2533

Data Sheet
HC1500U03
3dB 90° Coupler IC
12GHz-18GHz

Typical Performance (25°C: 12-18GHz)

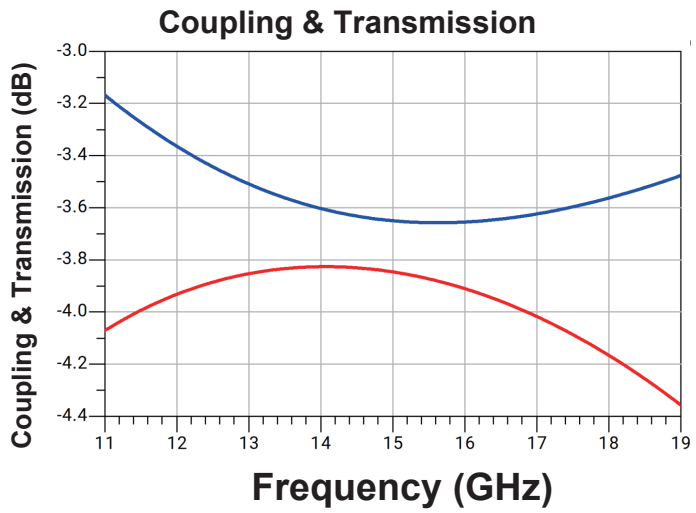

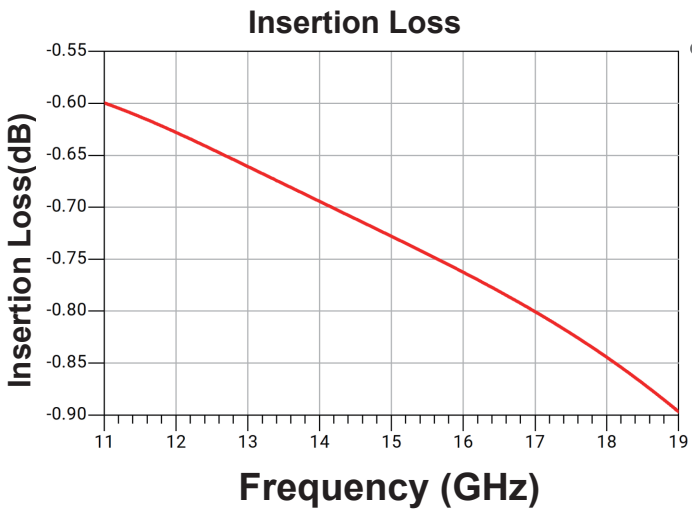

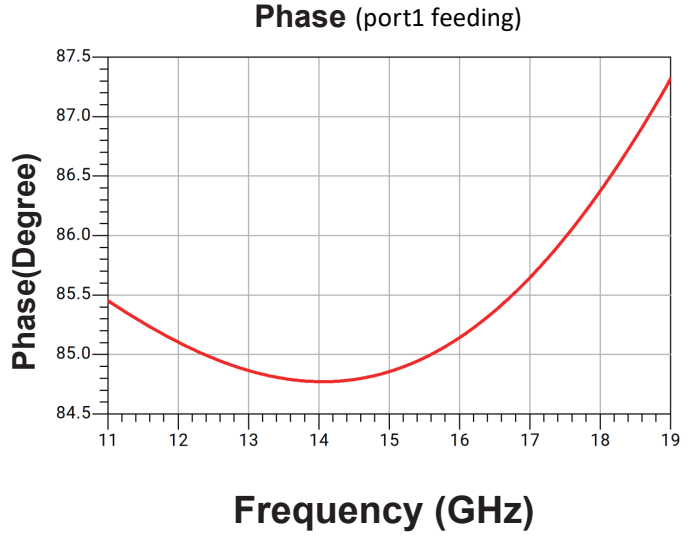

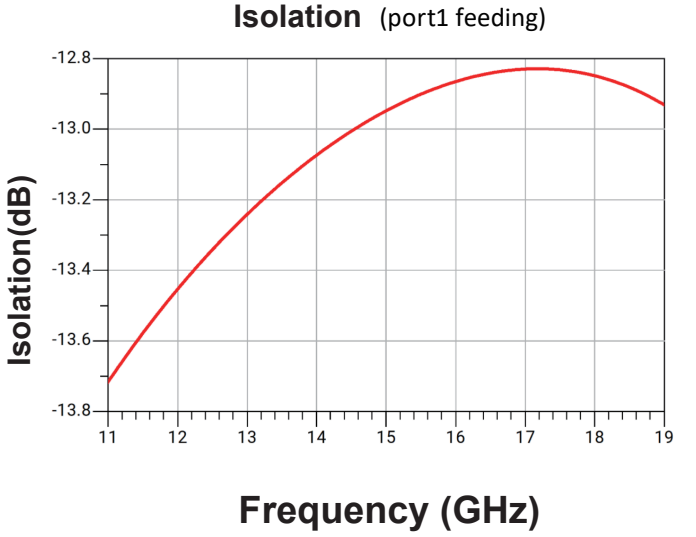

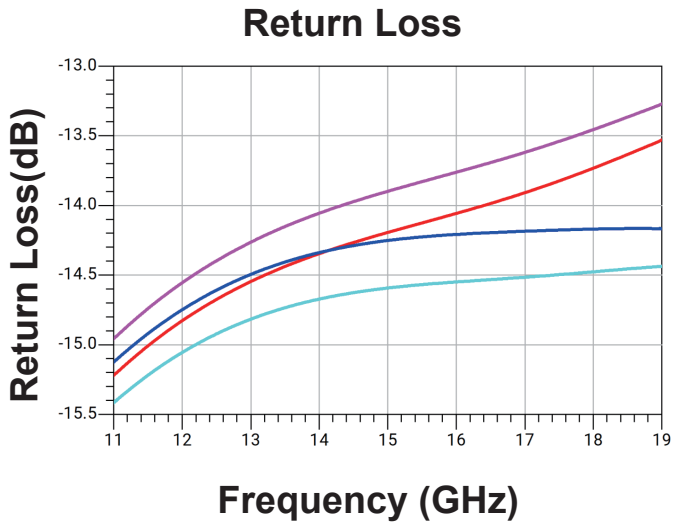

Yantel Corporation

Add: No.308-322, 3F, Building 1, Juchuang Jingu Innovation Park, Wenyuan Road 35, Xili Street, Nanshan, Shenzhen, China
Tel: 86-755-8355-1886 Fax: 86-755-8355-2533

For detailed performance specs & shopping online see Yantel web site : www.yantel-corp.com

Data Sheet
HC1500U03
3dB 90° Coupler IC
12GHz-18GHz

Outline Drawing

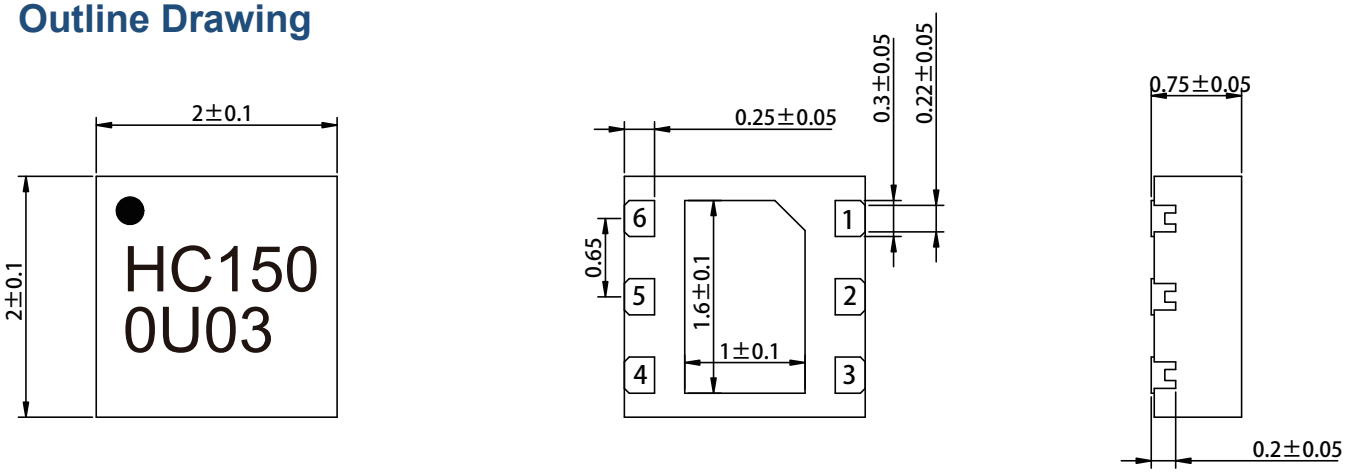

TOP VIEW BOTTOM VIEW SIDE VIEW

Land Pattern

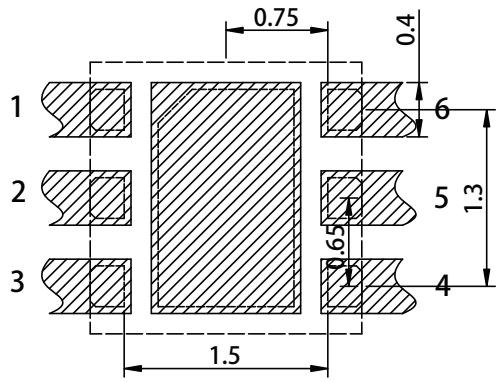

units:mm
Notes: All dimensions show in millimeters
Recommended Land PatternTop View

Hybrid Coupler Pin Configuration

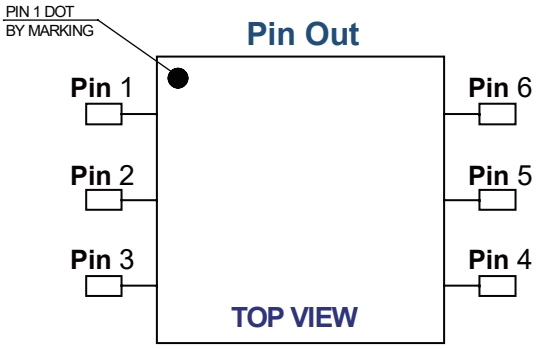

Pin #	Connection	Connection	Connection	Connection
1	IN	ISOL	DIRECT	COUPLED
2	GND	GND	GND	GND
3	ISOL	IN	COUPLED	DIRECT
4	DIRECT	COUPLED	IN	ISOL
5	GND	GND	GND	GND
6	COUPLED	DIRECT	ISOL	IN

Yantel Corporation
Add: No.308-322, 3F, Building 1, Juchuang Jingu Innovation Park, Wenyuan Road 35, Xili Street, Nanshan, Shenzhen, China
Tel: 86-755-8355-1886 Fax: 86-755-8355-2533